PROJECT 20: Design and Analysis of SR Latch by using Cadence Virtuoso

A Comprehensive Study of Analog Circuits

By: Priya Chaudhary, Astitva Johri and
Bhavya Solanki

Chapters:

List of Figures……..…… 3

1. Introduction …….. 4
2. Brief Description…… 5
3. Circuit Design……. 6-7
   3.1 Schematic Design……... 6
   3.2 Simulation Setup…….. 6
   3.3 Transient Analysis…….…… 7
4. Simulation Results…….. 8
5. Advantages and Disadvantages…….. 9
   5.1 Advantages……. 9
   5.2 Disadvantages……. 9
6. Conclusion…….. 10
7. Frequently Asked Questions (FAQs)…….. 11

LIST OF FIGURES

Figure 3.1 Circuit of SR Latch..……..… 7

Figure 4.1 Simulation Results of SR Latch..……..... 8

1. INTRODUCTION

An SR latch (Set-Reset latch) is a bistable multivibrator and serves as a fundamental building block in digital logic circuits. Its primary purpose is to store a single bit of information, making it a critical component in memory and sequential logic applications. The SR latch operates using two inputs—Set (S) and Reset (R)—and produces two complementary outputs, Q and . By manipulating these inputs, the latch can switch between different states: set, reset, and hold.

The SR latch is implemented using cross-coupled logic gates, commonly NOR or NAND gates. This design ensures stable operation due to the feedback loop formed between the gates. The functionality of the SR latch has far-reaching implications, as it is the basis for more complex devices like flip-flops, registers, and memory elements. This documentation aims to provide a detailed guide on designing and analyzing an SR latch using Cadence Virtuoso, a premier electronic design automation (EDA) tool widely used in academia and industry for custom IC design and simulation.

Cadence Virtuoso allows designers to create, simulate, and verify integrated circuits with high accuracy and efficiency. By using this tool, you can explore the theoretical concepts of the SR latch, translate them into practical circuit designs, and evaluate their performance under various conditions through simulation.

2. BRIEF DESCRIPTION

The SR latch embodies the concept of feedback and logical interdependence to achieve memory functionality. At its core, it consists of two interlocked gates that operate synchronously to produce stable outputs based on their inputs.

Components and Configuration:-

1. **Logic Gates**: NOR or NAND gates form the building blocks of the SR latch, where their logic behavior dictates the latch's operation.
2. **Feedback Loop**: The outputs of each gate are fed back to the inputs of the other, creating a closed loop that ensures the circuit's state is maintained until explicitly changed by the inputs.

Functional States:-

The SR latch operates in four distinct states:

1. **Set State**: This state sets the latch to store a logical 1.
2. **Reset State**: This state resets the latch to store a logical 0.
3. **Hold State**: In this state, the latch preserves its last known state.
4. **Invalid State**: This state is avoided in practical applications as it disrupts the circuit's normal operation.

The SR latch's ability to maintain its state without constant input signals makes it an indispensable tool for building memory circuits and sequential systems. However, it is critical to avoid invalid input combinations to ensure reliable operation.

3. CIRCUIT DESIGN

3.1 Schematic Design

To design the SR latch schematic in Cadence Virtuoso:

1. **Open Cadence Virtuoso:** Launch the Virtuoso Schematic Editor to begin the design process.
2. **Add Components:** Place the required logic gates (NOR or NAND) from the component library.
3. **Connect Components:** Wire the gates in a cross-coupled configuration, ensuring the feedback loop is properly established.
4. **Define Inputs and Outputs:** Add input pins and output pins.
5. **Validate the Schematic:** Use the Design Rule Check (DRC) tool to verify that the schematic meets all design requirements.

3.2 Simulation Setup

Simulation is essential to verify the SR latch's functionality:

1. **Set Up Testbench:** Create a testbench schematic with voltage sources connected to the and inputs.
2. **Define Input Stimuli:** Configure the voltage sources to generate test patterns for the Set, Reset, Hold, and Invalid states.
3. **Choose Analysis Type:** Select transient analysis to observe the latch's behavior over time.
4. **Run the Simulation:** Use the ADE (Analog Design Environment) to execute the simulation and capture the waveforms.

3.3 Transient Analysis

Transient analysis provides insights into the SR latch's dynamic behavior:

1. **Analyze Outputs**: Examine the and waveforms to ensure they follow the expected state transitions.
2. **Check Timing**: Verify the propagation delay and the stability of the outputs.
3. **Identify Issues**: Look for glitches or unexpected behavior, especially in response to rapid input changes or invalid states.
4. **Optimize Design**: If necessary, adjust component parameters or the schematic to improve performance.

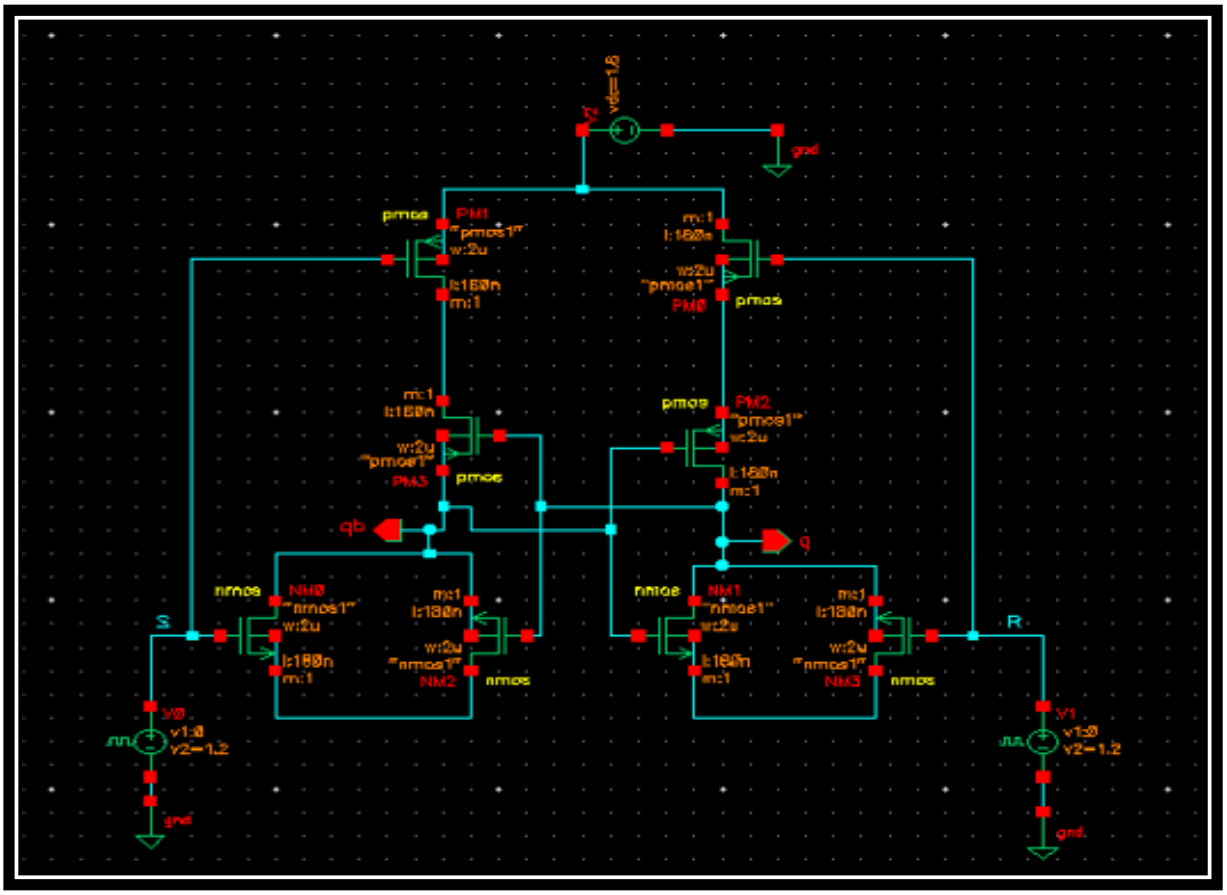

Figure 3.1 Circuit of SR Latch

4. SIMULATION RESULTS

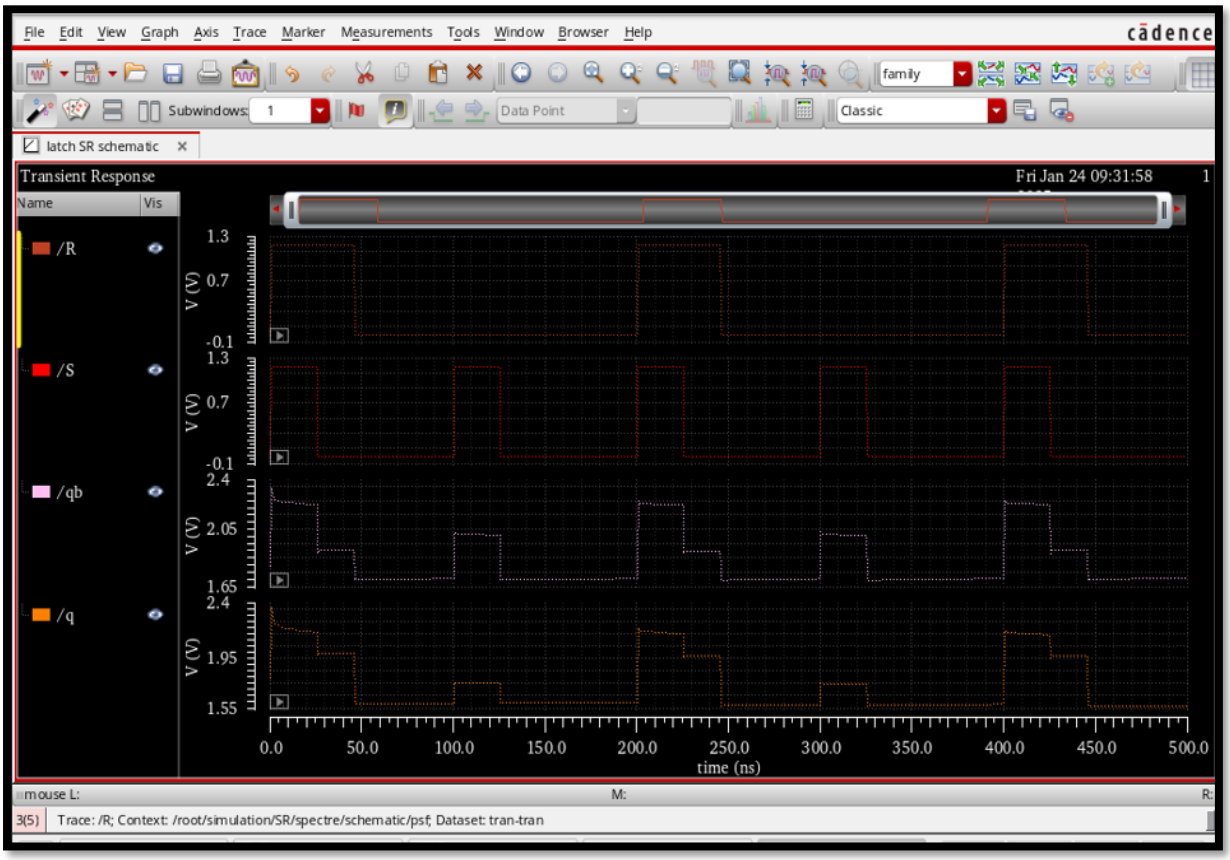

Figure 4.1: Simulation Results of SR Latch

5. ADVANTAGES AND DISADVANTAGES

5.1 Advantages:-

1. **Simplicity:** Easy to design and implement.
2. **Low Power Consumption:** Minimal power usage when inputs are idle.
3. **Foundation for Sequential Circuits:** Essential for building more complex circuits like flip-flops and registers.

5.2 Disadvantages:-

1. **Invalid State:** The SR latch does not handle the condition where both S and R are high.
2. **Level-Sensitive Nature:** It may lead to glitches in circuits requiring edge-sensitive operation**.**
3. **Limited Functionality:** Cannot store multiple bits or operate in complex systems without additional circuitry.

6. CONCLUSION

The SR latch is a versatile and essential component in digital electronics. It provides the foundation for designing more complex sequential circuits such as flip-flops, counters, and memory units. By understanding the theoretical underpinnings and practical implementation of the SR latch, engineers can gain insights into how information is stored and manipulated in digital systems.

Using Cadence Virtuoso to design and analyze an SR latch offers numerous advantages. This tool enables precise schematic creation, simulation, and performance analysis, ensuring that the designed circuit meets the desired specifications. Through simulation, designers can explore the SR latch's behavior under various input conditions, identify potential issues such as glitches or invalid states, and optimize the design accordingly.

Despite its limitations, such as the inability to handle the invalid state where both inputs are high, the SR latch remains a critical building block in digital logic. Its simplicity, low power consumption, and foundational role in sequential logic circuits make it an indispensable part of digital design.

In conclusion, mastering the design and analysis of the SR latch using tools like Cadence Virtuoso is an important step for anyone pursuing expertise in digital electronics and integrated circuit design. The knowledge gained from this exercise not only deepens one's understanding of basic sequential circuits but also lays the groundwork for tackling more advanced challenges in the field.

7. FREQUENTLY ASKED QUESTIONS (FAQs)

Q1. What is the main difference between SR and D latch?

Answer: The SR latch has two inputs (S and R), while the D latch has a single input (D) to avoid invalid states. The D latch ensures proper data storage by eliminating the invalid condition of the SR latch.

Q2. Can we use NAND gates instead of NOR gates?

Answer: Yes, an SR latch can be constructed using cross-coupled NAND gates. The logic and operation remain the same, but the active states are inverted**.**

Q3. Why is Cadence Virtuoso used for SR latch design?

Answer: Cadence Virtuoso provides an industry-standard platform for designing, simulating, and verifying integrated circuits, offering high accuracy and flexibility in creating custom designs.

Q4. What are the common applications of SR latches?

Answer: SR latches are used in memory elements, data storage, and as building blocks in flip-flops and sequential logic circuits.

Q5. How do I handle the invalid state in an SR latch?

Answer: The invalid state can be avoided by designing a modified latch, such as a D latch or JK flip-flop, which ensures proper operation under all input conditions.